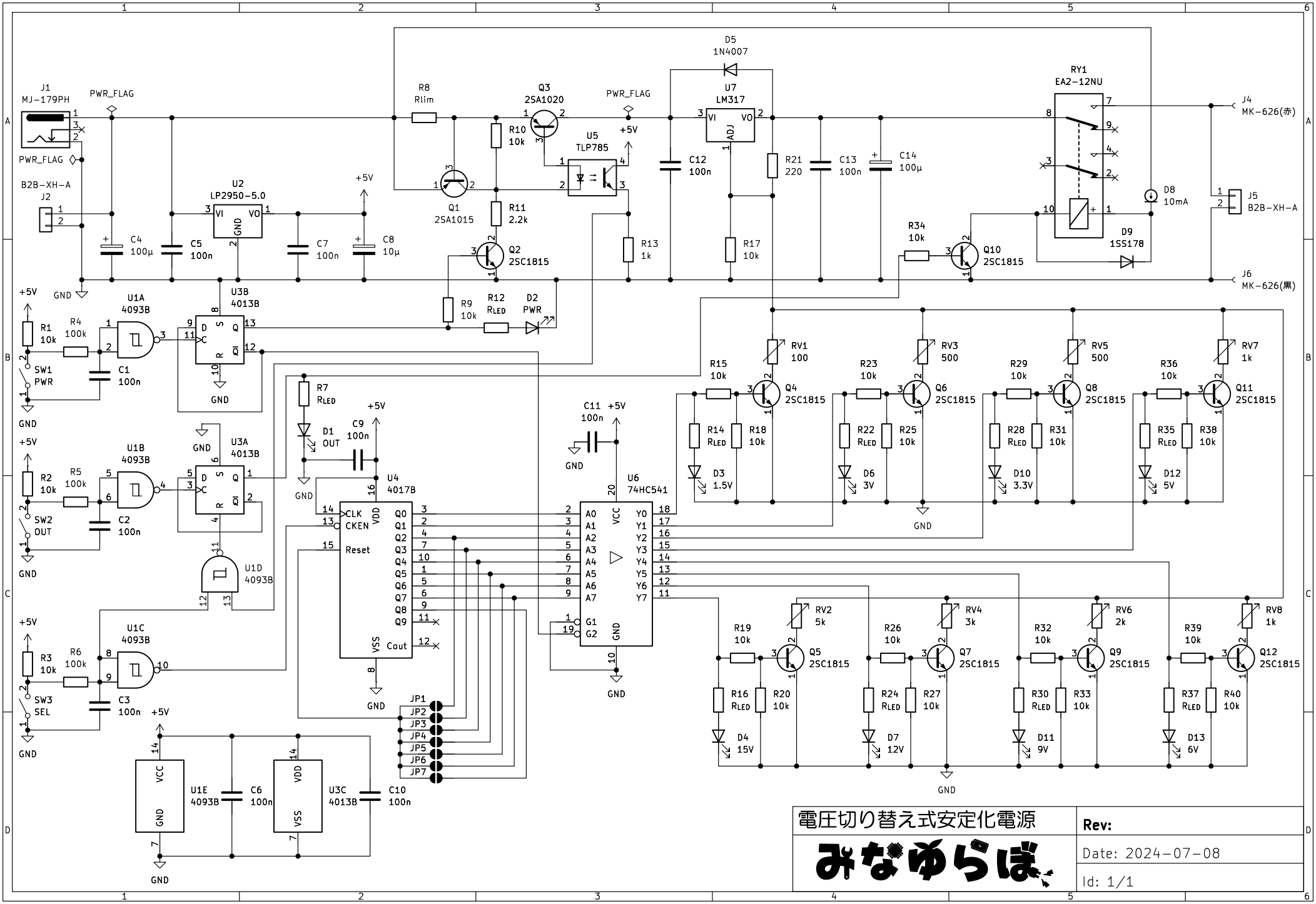
J1
MJ-179PH
PWR_FLAG
B2B-XH-A
J2
C4
100µ
C5
100n
U2
LP2950-5.0
VI
VO
GND
C7
100n
C8
10µ
+5V
R8
Rlim
Q1
2SA1015
R10
10k
R11
2.2k
Q2
2SC1815
Q3
2SA1020
U5
TLP785
R13
1k
R9
10k
R12
RLED
D2
PWR
D5
1N4007
U7
LM317
ADJ
C12
100n
R21
220
C13
100n
C14
100µ
R17
10k
R34
10k
Q10
2SC1815
RY1
EA2-12NU
D8
10mA
D9
1SS178
J4
MK-626(赤)
J5
B2B-XH-A
J6
MK-626(黒)
U1A
4093B
U3B
4013B
R1
10k
R4
100k
SW1
PWR
C1
100n
U1B
4093B
U3A
4013B
R2
10k
R5
100k
SW2
OUT
C2
100n
U1D
4093B
U1C
4093B
R3
10k
R6
100k
SW3
SEL
C3
100n
R7
RLED
D1
OUT
C9
100n
U4
4017B
CLK
CKEN
Reset
VDD
VSS
Cout
Q0
Q1
Q2
Q3
Q4
Q5
Q6
Q7
Q8
Q9
C11
100n
U6
74HC541
VCC
A0
A1
A2
A3
A4
A5
A6
A7
G1
G2
Y0
Y1
Y2
Y3
Y4
Y5
Y6
Y7
JP1
JP2
JP3
JP4
JP5
JP6
JP7
U1E
4093B
C6
100n
U3C
4013B
C10
100n
RV1
100
R15
10k
Q4
2SC1815
R14
RLED
R18
10k
D3
1.5V
RV3
500
R23
10k
Q6
2SC1815
R22
RLED
R25
10k
D6
3V
RV5
500
R29
10k
Q8
2SC1815
R28
RLED
R31
10k
D10
3.3V
RV7
1k
R36
10k
Q11
2SC1815
R35
RLED
R38
10k
D12
5V
RV2
5k
R19
10k
Q5
2SC1815
R16
RLED
R20
10k
D4
15V
RV4
3k
R26
10k
Q7
2SC1815
R24
RLED
R27
10k
D7
12V
RV6
2k
R32
10k
Q9
2SC1815
R30
RLED
R33
10k
D11
9V
RV8
1k
R39
10k
Q12
2SC1815
R37
RLED
R40
10k
D13
6V
電圧切り替え式安定化電源
みなゆらぼ
Rev:
Date: 2024-07-08
Id: 1/1